Massachusetts Institute of Technology

5.05

Main Group Chemistry

AIM and NBO Analysis of Oxocarbon Heterocumulenes as Divalent Carbon(0) Species

Final Paper

Author:

Jonathan Melville

Instructor:

Christopher C. "Kit" Cummins

December 13, 2016

Contents

1 Abstract **1**

2 Introduction **1**

3 Results and Discussion **1**

3.1 Dicarbon Monoxide (C_2O) 1

3.1.1 C_2O 2

3.1.2 $C_2O{\cdot}BH_3$ 2

3.1.3 $C_2O{\cdot}2\ BH_3$ 3

3.1.4 $C_2O{\cdot}3\ BH_3$ 4

3.2 Carbon Suboxide (C_3O_2) 5

3.2.1 C_3O_2 6

3.2.2 $C_3O_2{\cdot}BH_3$ 7

3.2.3 $C_3O_2{\cdot}2\ BH_3$ 8

4 Experimental **9**

5 Conclusion **9**

6 Acknowledgments **10**

References **10**

List of Figures

1 NRT-calculated C_2O resonance structures 2

2 C_2O geometry 2

3 $C_2O{\cdot}BH_3$ geometry 2

4 NRT-calculated $C_2O{\cdot}BH_3$ resonance structures 3

5 $C_2O{\cdot}2\ BH_3$ geometry 3

6 NRT-calculated $C_2O{\cdot}2\ BH_3$ resonance structures 4

7 NRT-calculated $C_2O{\cdot}3\ BH_3$ resonance structures 5

8 $C_2O{\cdot}3\ BH_3$ geometry 5

9 NRT-calculated C_3O_2 resonance structures 6

10 C_3O_2 geometry 6

11 $C_3O_2{\cdot}BH_3$ geometry 7

12 NRT-calculated $C_3O_2{\cdot}BH_3$ resonance structures 7

13 $C_3O_2{\cdot}2\ BH_3$ geometry 8

14 NRT-calculated $C_3O_2{\cdot}2\ BH_3$ resonance structures 9

List of Tables

1 NRT resonance state weightings of C_2O. 2

2 Selected NRT resonance state weightings of $C_2O{\cdot}BH_3$. 3

3 Selected NRT resonance state weightings of $C_2O{\cdot}2\ BH_3$. 4

4 Selected NRT resonance state weightings of $C_2O{\cdot}3\ BH_3$. 5

5 Selected NRT resonance state weightings of C_3O_2. 6

6 Selected NRT resonance state weightings of $C_3O_2{\cdot}BH_3$. 8

7 Selected NRT resonance state weightings of $C_3O_2{\cdot}2\ BH_3$. 9

1 Abstract

Ab initio calculations of the unusual molecular systems dicarbon monoxide (C_2O) and carbon suboxide (C_3O_2) and their adducts with boranes were performed with an eye towards identifying carbonyl-like functionality in their carbon-oxygen bonds, which could signal the possibility for interesting reactivity at such a carbon-carbonyl center. Using natural bond orbital and natural resonance theory techniques (NBO/NRT) coupled with quantum theory of atoms in molecules (AIM) wavefunction analysis, the structure of dicarbon monoxide was found to be most like that of the heterocumulene, whereas carbon suboxide was found to be most like the adduct of a single carbonyl into the empty orbital on the terminal carbon of C_2O.

2 Introduction

Linear carbon-oxygen systems such as dicarbon monoxide (:C=C=O) are deceptively simple molecules that have proven to be of great interest to both theoretical and experimental chemists – capable of reacting with nitrogen oxides to produce cyanide and cyanate radicals [1] and (as ketenylidene ligand), seen as in reagents such as Bestmann's Ylide (where it is an important tool for the diastereospecific carbonylation of alcohols and amines to form unsaturated esters and amides) [2,3] or in proposed intermediates for the industrially-important Fischer-Tropsch process. [4] Generally synthesized by photolysis of carbon suboxide, it is intimately linked to the chemistry of divalent carbon(0) compounds (carbones). [5,6] For example, the previously-mentioned carbon suboxide (O=C=C=C=O) can be thought of in some respects as a carbodicarbonyl, $C(CO)_2$. [7–9] In particular, Frenking et. al. suggest that the relatively-unexplored chemistry of divalent carbon(0) may open novel synthetic frontiers, much like divalent carbon(II) compounds (carbenes) have proven to be invaluable synthetic agents. [10]

3 Results and Discussion

3.1 Dicarbon Monoxide (C_2O)

The prototypical oxocarbon system, this simple triatomic molecule is incredibly high-energy and exceedingly reactive. Much of this can be attributed to its unfavorable resonance structures – the only arrangement even theoretically capable of satisfying the octet rule, a three-membered ring with a carbon-carbon triple bond (oxiryne), is impossible due to bond strain. All hope of achieving an octet lost, dicarbon monoxide is a fundamentally unstable system whose terminal carbon is so electron-deficient that when even when given the opportunity to couple datively to form an adduct, it will often prefer to

eliminate anything necessary in order to reach saturation.

3.1.1 C_2O

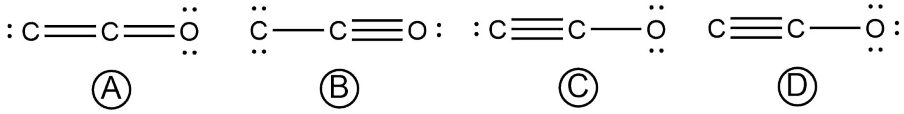

Figure 1: *Selected resonance structures of dicarbon monoxide, obtained by NRT methods.*

Structure	Contribution (%)
Ⓐ	82.92%
Ⓑ	13.39%
Ⓒ	2.40%
Ⓓ	1.28%

Table 1: *NRT resonance state weightings of C_2O.*

This completely linear molecule exists primarily in its heterocumulene form (Ⓐ), and while the role of its carbocarbonyl form Ⓑ is not insignificant by NRT analysis, it is no doubt disfavored in part due to the undesirable nature of having two lone pairs on a valence-deficient carbon. The equilibrium bond distances ($r_{C–C}$=1.36Å; $r_{C–O}$=1.17Å) are consistent with the covalent radii of carbon-carbon double bond (∼1.34Å), though the carbon-oxygen bond is noticeably shorter than the predicted ∼1.24Å for a C=O bond – closer, in fact to the 1.13Å of a C≡O bond – hinting at the substantially noncovalent nature of this molecule. [11]

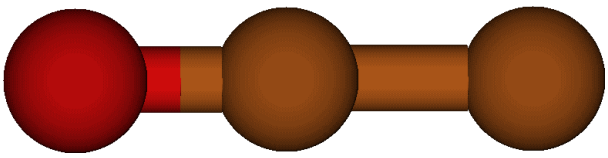

Figure 2: *Calculated geometry of dicarbon monoxide.*

3.1.2 $C_2O{\cdot}BH_3$

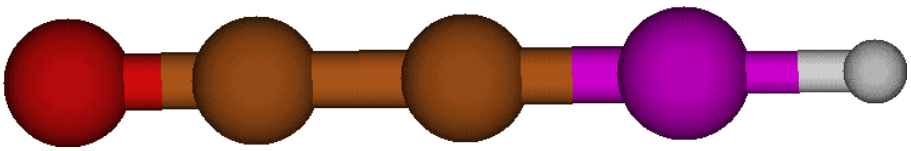

Figure 3: *Calculated geometry of the dicarbon monoxide–borane "adduct".*

Perhaps nowhere is the eminently unhappy nature of the dicarbon monoxide molecule more evident than its reaction with borane, in which it eschews traditional dative bonding in order to eliminate H_2 gas and form a carbon-boron triple bond. (An animation

of hydrogen's unceremonious departure to leave behind a linear molecule can be found at `https://www.ocf.berkeley.edu/~jmlvll/anim/c2o-bh3.gif`.) This molecule appears to exist roughly equally as the :O≡C—C≡B—H carbonyl and the :Ö=C=C=B—H heterocumulene, though its predicted bond lengths ($r_{C–O}$=1.16Å; $r_{C–B}$=1.35Å) are more consistent with the covalent radii of C≡O and a C≡B triple bonds (1.13Å and 1.33Å, respectively). While compounds featuring such boron-carbon triple bonds are not exactly common, this predicted structure is nevertheless completely in line with several structures of reported C≡B-containing compounds in the literature. [12]

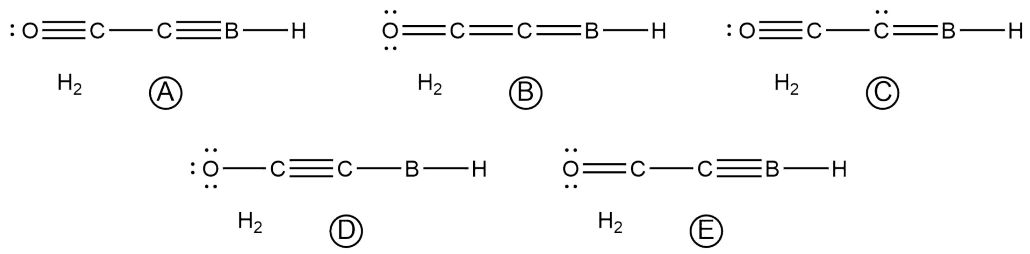

Figure 4: *Selected resonance structures of the dicarbon monoxide–borane adduct, obtained by NRT methods.*

Structure	Contribution (%)
Ⓐ	38.20%
Ⓑ	38.19%
Ⓒ	7.98%
Ⓓ	6.83%
Ⓔ	6.38%
other	2.42%

Table 2: *Selected NRT resonance state weightings of $C_2O{\cdot}BH_3$.*

3.1.3 $C_2O{\cdot}2\ BH_3$

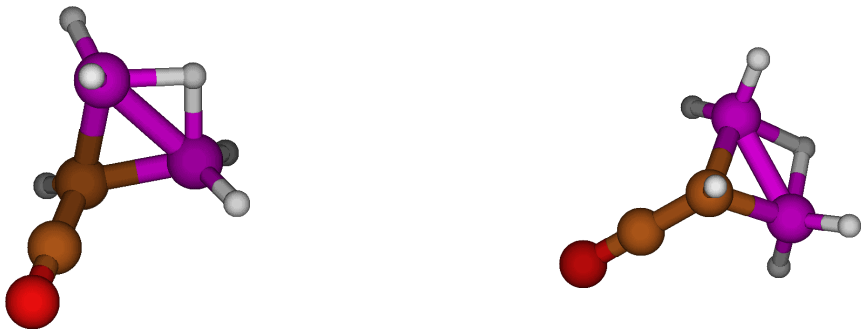

Figure 5: *Calculated geometry of dicarbon monoxide–bis(borane) adduct.*

The addition of another borane molecule to the $C_2O{\cdot}BH_3$ system produces perhaps a more predictable result – though C_2O's terminal carbon plucks off a hydrogen atom

from one borane molecule in its quest to reach saturation, the second borane complexes rather expectedly to form a tetrahedral geometry at the carbon. Having lost a proton to the terminal carbon, the two borane molecules then adopt a diborane-like structure, with a bridging hydrogen between them. (An animation of this hydrogen transfer to carbon and subsequent formation of the diborane can be found at `https://www.ocf.berkeley.edu/~jmlvll/anim/c2o-2bh3.gif`). This arrangement allows for the complex to exist predominately as a tetravalent carbocarbonyl, with some 70% of predicted resonance structures preferring the C≡O triple bond, corroborated by an equilibrium bond length of 1.15Å (though it is worth noting that of 458 calculated resonances, only 4 of them possess a resonance weight above 5%, leaving over 55% of the total resonance weight of the system to the remaining 454 structures, none of which contribute more than 4.3% to the total).

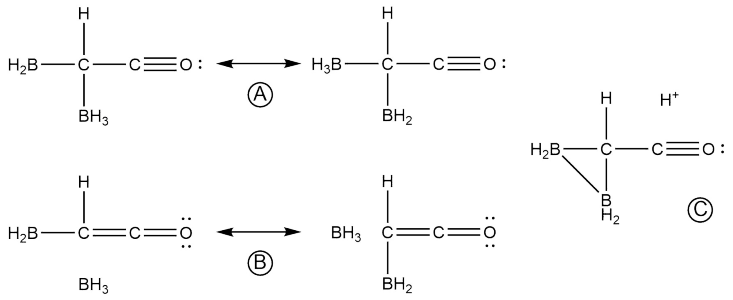

Figure 6: *Selected resonance structures of the dicarbon monoxide–bis(borane) adduct, obtained by NRT methods.*

Structure	Contribution (%)
Ⓐ	31.18%
Ⓑ	10.23%
Ⓒ	7.41%
other	51.18%

Table 3: *Selected NRT resonance state weightings of $C_2O{\cdot}2\ BH_3$.*

3.1.4 $C_2O{\cdot}3\ BH_3$

As expected, the addition of a third borane to dicarbon monoxide, rather than simply coordinating three boranes to the terminal carbon as might be expected from a naïve valency perspective, simply adds a third virtually-noninteracting borane to the $C_2O{\cdot}2\ BH_3$ system, an understandable result considering the naked C_2O molecule in its carbocarbonyl state only possesses a maximum of two lone pairs with which to adduct boranes. It is also worth noting that virtually all calculated resonances of this adduct favor the carbocarbonyl resonance over the cumulene. (An animation of the formation of this complex, which occurs virtually identically to the formation of the $C_2O{\cdot}2\ BH_3$ system, can be found at `https://www.ocf.berkeley.edu/~jmlvll/anim/c2o-3bh3.gif`).

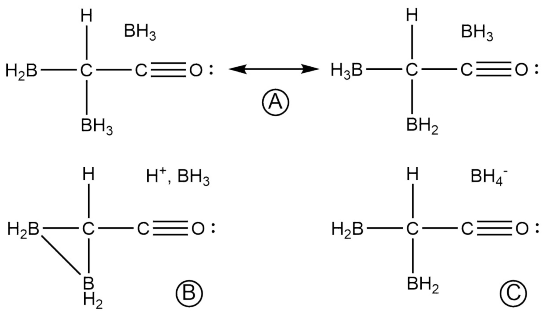

Figure 7: *Selected resonance structures of the dicarbon monoxide–tris(borane) adduct, obtained by NRT methods.*

Structure	Contribution (%)
Ⓐ	42.39%
Ⓑ	17.87%
Ⓒ	6.37%
other	33.37%

Table 4: *Selected NRT resonance state weightings of $C_2O{\cdot}3\ BH_3$.*

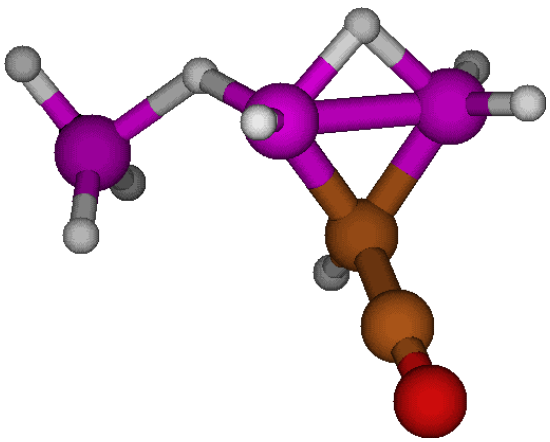

Figure 8: *Calculated geometry of dicarbon monoxide–tris(borane) adduct.*

3.2 Carbon Suboxide (C_3O_2)

This relatively simple linear oxocarbon system is markedly more stable than the perpetually octet-deficient C_2O, and unlike the latter can actually be isolated under standard conditions through various dehydrative or electrochemical mechanisms. Though it exists as a heavy gas, it is nevertheless prone to various further decompositions or polymerizations; despite this, it is a moderately useful reagent in the occasional organic reaction, where it reacts like a diketene or, in the presence of water, as the dianhydride of malonic acid. [13] It is also, however, capable of photolysis to form the previously-mentioned C_2O molecule via loss of CO gas, a reaction that is not consistent with the idea of carbon suboxide as a simple cumulene and in fact hints towards a deeper reactivity as a carbonyl–dicarbon monoxide or even a carbodicarbonyl. [5,6]

3.2.1 C_3O_2

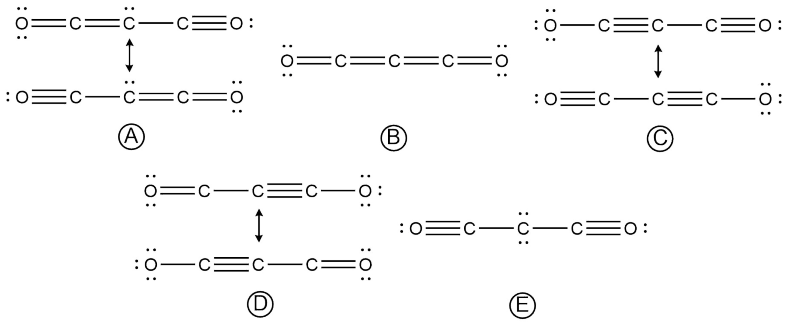

Figure 9: *Selected resonance structures of carbon suboxide, obtained by NRT methods.*

Structure	Contribution (%)
Ⓐ	42.13%
Ⓑ	11.21%
Ⓒ	11.00%
Ⓓ	10.05%
Ⓔ	9.01%
other	16.60%

Table 5: *Selected NRT resonance state weightings of C_3O_2.*

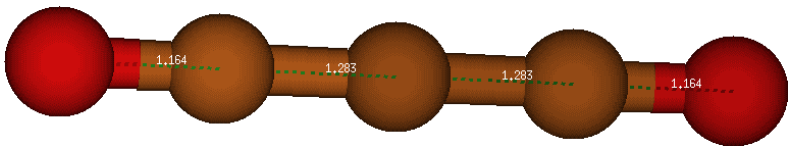

Figure 10: *Calculated geometry of carbon suboxide.*

NRT structures of C_3O_2 (Figure 9) corroborate this carbonyl-centric view of the system; the "obvious" double-bonded structure of the system :Ö=C=C=C=Ö: (which, ironically, is the most-common representation of the molecule found in the literature and in reference texts) only contributes about 11% to the overall structure of the system. In fact, the substantial majority of all calculated resonance forms feature at least one :C≡O: functionality. We can attempt to further understand the system from this perspective by comparing the resonance states in Figure 9 to the structures of C_2O in Figure 1 on page 2. It is then plainly evident that the primary structure Ⓐ of carbon suboxide is merely the 83%-dominant primary structure of dicarbon monoxide (:C=C=Ö:), with a spare carbonyl ligand binding to the subvalent terminal carbon. Carbonyl adducts of the other resonance states of C_2O also feature prominently in the remaining resonances of C_3O_2; resonance Ⓒ of the suboxide is easily recognized as the carbonyl adduct of the monoxide resonance state :C≡C—Ö:, and resonance Ⓔ is actually the carbon(0) dicarbonyl – the carbonyl addition product of the monovalent carbon(0) carbonyl, the secondary (13%) resonance state of the monoxide (:C̈—C≡O:).

3.2.2 $C_3O_2{\cdot}BH_3$

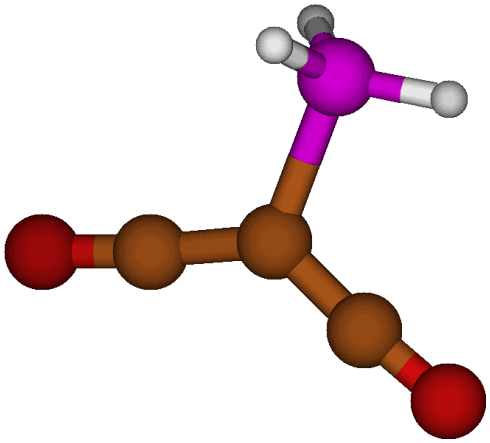

Figure 11: *Calculated geometry of the carbon suboxide–borane adduct.*

Adducting a borane molecule to carbon suboxide only accentuates the appearance of C_3O_2 as a carbonyl complex. The bending of the molecule about the central carbon (Figure 11) is obvious, but more subtle conformational changes (such as a shortening of the $r_{C—O}$ distance from 1.16Å to 1.14Å , along with a slight delinearization of the $\angle_{CCO}$ bond angle from a perfect 180° to a barely-askew 174.8°) only serve to further underscore the depiction of carbon suboxide put forth in Section 3.2.1. The NRT picture of the molecule (Figure 12) is also in agreement here, with the calculated contributions of carbonyl-containing resonances of C_3O_2 increasing relative to their proportion in the non-adducted molecule. Most significantly, the contribution of the carbone resonance jumps significantly in the boron adduct, from 9.0% contribution in the bare molecule to 24.4% in the adduct, presumably a reflection of the substantial nucleophilicity of the divalent carbon(0) species. AIM analysis supports this view of two carbonyls coordinating into a divalent carbon(0) center, itself attacking a borane acceptor, with 0.60e of charge transferred from the terminal to the central carbon, and 0.98e of charge from the central carbon to the borane.

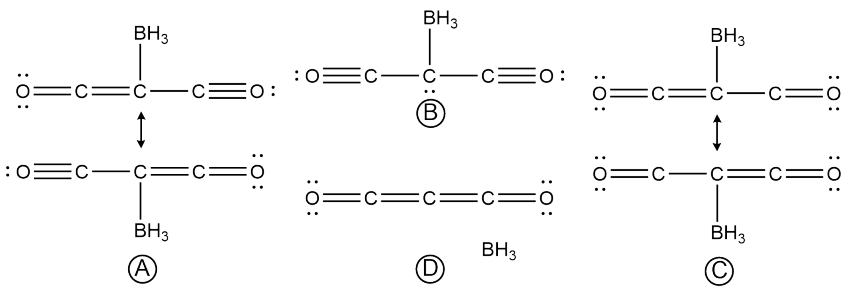

Figure 12: *Selected resonance structures of the carbon suboxide–borane adduct, obtained by NRT methods.*

Structure	Contribution (%)
Ⓐ	35.46%
Ⓑ	24.41%
Ⓒ	11.45%
Ⓓ	6.44%
other	11.45%

Table 6: *Selected NRT resonance state weightings of $C_3O_2{\cdot}BH_3$.*

3.2.3 $C_3O_2{\cdot}2\ BH_3$

It is perhaps surprising, then, that the bis(borane) adduct of carbon suboxide does not simply adopt a tetrahedral geometry at the central carbon, as befitting double adduction by the ostensible two carbon(0) lone pairs of the proposed carbodicarbonyl structure. Though the structure of Figure 13 may purport to show such a tetrahedral coordination, the extended $r_{C—B}$ distances (2.1Å, substantially longer than a hypothetical 1.6Å C—B single covalent bond) and the substantial planarization of the borane molecules (with an $\angle_{HBH} = 117.5°$) suggest that any such dative interaction between the two boranes and the central carbon is very weak, if it exists at all. Indeed, an examination of the trajectory of the structure optimization (available at `https://www.ocf.berkeley.edu/~jmlvll/anim/c2o3-2bh3.gif`) shows an apparent relaxation of the borane-carbon interaction, with stretching of the C—B bond and planarization of the boron plainly obvious relative to the unoptimized structure of the borane diadduct.

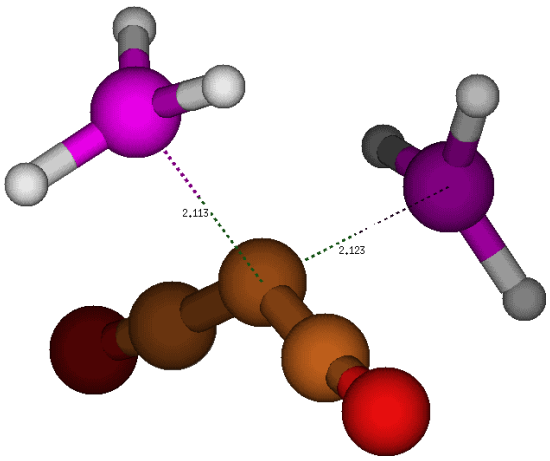

Figure 13: *Calculated geometry of the carbon suboxide–bis(borane) adduct.*

A resolution of this apparent contradiction can be found in the vibrational analysis of the structure, which finds an imaginary mode at -103.78 cm^{-1}, placing the weakly-interacting tetrahedral complex in Figure 13 on a saddlepoint. Visualization of the imaginary vibrational mode resolves the discrepancy, revealing a 'wobble' alternately coordinating the central carbon to one of the two boranes. (A deeply satisfying animation of this vibrational mode can be found at `https://www.ocf.berkeley.edu/~jmlvll/`

`anim/c2o3-2bh3-vib.gif`.) Further analysis of this saddlepoint suggests that, despite the measurable presence of the carbone resonance of C_3O_2, the molecule nevertheless prefers to have only a single lone pair on the central carbon as :O≡C—C̈=C=Ö:, essentially a single-carbonyl adduct of the most-common C_2O resonance. It is likely for this reason that the suboxide prefers to coordinate with at most one borane molecule at a time, and the diborane adduct finds itself drawn towards the structure of the monoborane complex (Figure 11) rather than coordinating tetrahedrally.

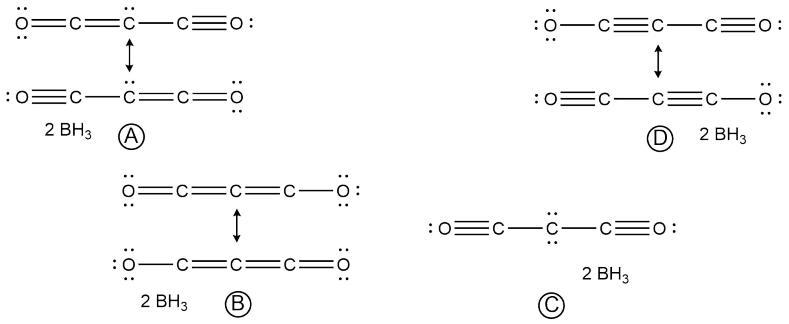

Figure 14: *Selected resonance structures of the carbon suboxide–bis(borane) adduct, obtained by NRT methods.*

Structure	Contribution (%)
Ⓐ	45.70%
Ⓑ	18.73%
Ⓒ	6.75%
Ⓓ	5.60%
other	23.22%

Table 7: *Selected NRT resonance state weightings of C_3O_2·2 BH_3.*

4 Experimental

DFT calculations were performed with ORCA 3.0.3 at the Becke 3-parameter Lee-Yang-Parr (B3LYP) hybrid functional at Def2-SVP level of theory. Subsequently, NBO/NRT analysis was conducted using NBO 6.0 software, AIMAll 16.10.31 was used to conduct wavefunction analysis, and MOLDEN 5.7 was used for visualization. [17–23]

5 Conclusion

NRT and AIM analyses of the unusual oxocarbon relatives C_2O and C_3O_2 and their adducts with borane suggest a number of interesting conclusions. While sources variously argue for the nature of these compounds as cumulenes or carbones [2,3,6–9], our analysis suggests an intermediate position – that while both the carbone and cumulene structures

contribute measurably, the dominant structure of the monoxide is the cumulene and the nature of the suboxide is most akin to the monocarbonyl adduct of the cumulene. These results are corroborated by the NRT and AIM analyses of the molecules and their borane adducts; most notably, that while monoborane adducts of the suboxide form normally, the bis(borane)–suboxide diadduct preferentially rearranges to form the monoborane adduct, in a manner uncharacteristic with the two lone pairs we would expect to find on a carbon(0) dicarbonyl. For this reason, we argue for an interpretation of C_3O_2 as an addition product of carbon monoxide into the empty carbon orbital of the principle cumulene structure of dicarbon monoxide, a hypothesis that is consistent with both the dominant NRT resonance structures and observed reactivity of these species. [5,10]

6 Acknowledgments

The author would like to acknowledge Prof. Kit Cummins for his guidance.

References

[1] Thweatt, W. D.; Erickson, M. A.; Hershberger, J. F. *J. Phys. Chem. A* **2004**, *108*, 74–79.
[2] Wang, J.; Ting, S. Z. Y.; Harvey, J. E. *Beilstein J. Org. Chem.* **2015**, *11*, 1815–1822.
[3] Boeckman, R. K., Jr.; Song, X.; Pero, J. E. *J. Org. Chem.*, **2006**, *71*, 8969–8972.
[4] Jensen, M. P.; Shriver, D. F. *J. Mol. Cat.* **1992**, *74*, 73–84.
[5] Anderson, D. J.; Rosenfeld, R. N. *J. Chem. Phys.* **1991**, *94*, 7857–7867.
[6] Bayes, K. *J. Am. Chem. Soc.*, **1961**, *83*, 3712–3713.
[7] Esterhuysen, C.; Frenking, G. *Chem. Eur. J.* **2011**, *17*, 9944–9956.
[8] Tonner, R.; Frenking, G. *Chem. Eur. J.* **2008**, *14*, 3260–3272.
[9] Tonner, R.; Frenking, G. *Chem. Eur. J.* **2008**, *14*, 3273–3289.
[10] Tonner, R.; Frenking, G. *Pure Appl. Chem.*, **2009**, *81*, 597–614.
[11] Pyykkö, P,; Atsumi, M. *Chem. Eur. J.* **2009**, *15*, 186–197.
[12] Allwohn, J.; Pilz, M.; Hunold, R.; Massa, W.; Berndt, A. *Angew. Chem. Int. Ed.* **1990**, *29*, 1032–1033.
[13] Reyerson, L. H.; Kobe, K. *Chem. Rev.* **1930**, *7*, 479–492.
[14] Schmidbaur, H. *Angew. Chem. Int. Ed.*, **2007**, *46*, 2984–2985.
[15] Frenking, G.; Neumüller, B.; Petz, W.; Tonner, R.; Öxler, F. *Angew. Chem. Int. Ed.*, **2007**, *46*, 2986–2987.
[16] Whitesides, G. M. *Adv. Mater.* **2004**, *16*, 1375–1377.
[17] Schaftenaar, G.; Noordik, J. H. *J. Comput.-Aided Mol. Design*, **2000**, *14*, 123–134.
[18] Neese, F. *Wiley Interdiscip. Rev.: Comput. Mol. Sci.* **2012**, *2*, 73–78.
[19] Becke, A. D. *J. Chem. Phys.* **1993**, *98*, 5648–5652.
[20] Lee, C.; Yang, W.; Parr, R. G. *Phys. Rev. B*, **1998**, *37* 785–789.
[21] Vosko, S. H.; Wilk, L.; Nusair, M. *Can. J. Phys.* **1980**, *58*, 1200–1211.
[22] Stephens, P. J.; Devlin, F. J.; Chabalowski, C. F.; Frisch, M. J. *J. Phys. Chem.* **1994**, *98*, 11623–11627.
[23] Bader, R. F. W. *Acc. Chem. Res.* **1985**, *18*, 9–15.